## Intended for an XL cocktail table

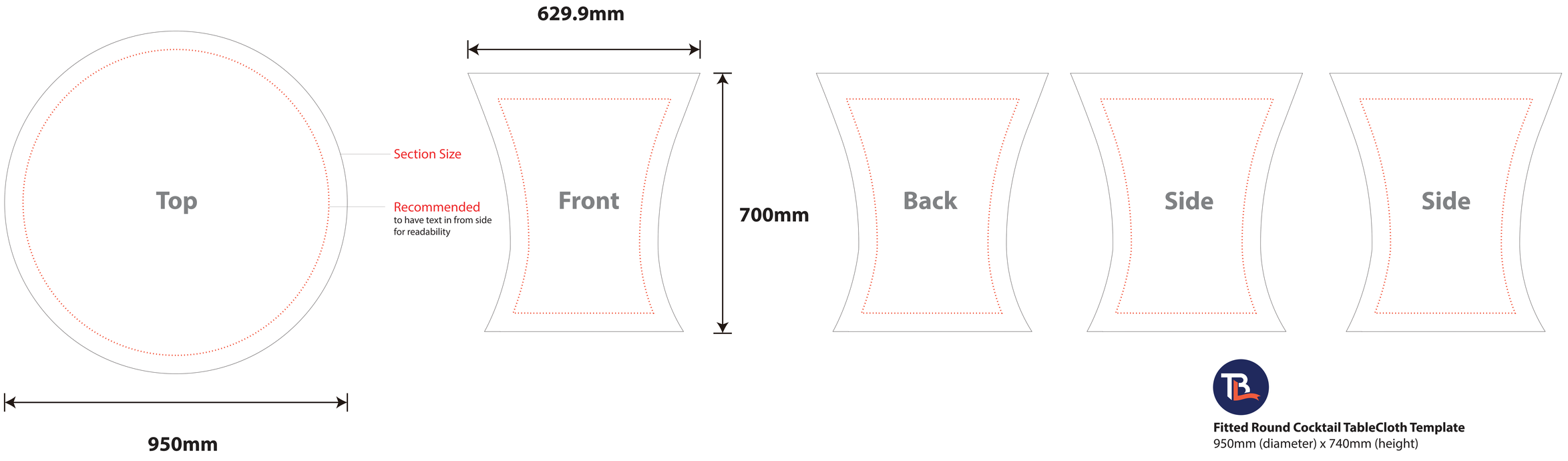


**Fitted Round Cocktail TableCloth Template**
950mm (diameter) x 740mm (height)

place artwork in the "artwork" layer.
"guides" layer can be turned on/off as you please.

**Note - Pay attention to how you intend the banner to 'drape' over the table. This may affect how you design the table cloth.**
**visit our website for examples at http://www.thebannerlady.com.au/products/premium/table-cloths**

Table Cloth Size
950mm (diameter x 740mm (height)

*** Don't forget to:**
- Outline all fonts
- Provide PMS colours
- Embed all Images
- Supply high resolution images (300 dpi)

*Banners can be supplied at 25%